COPY

[illegible]

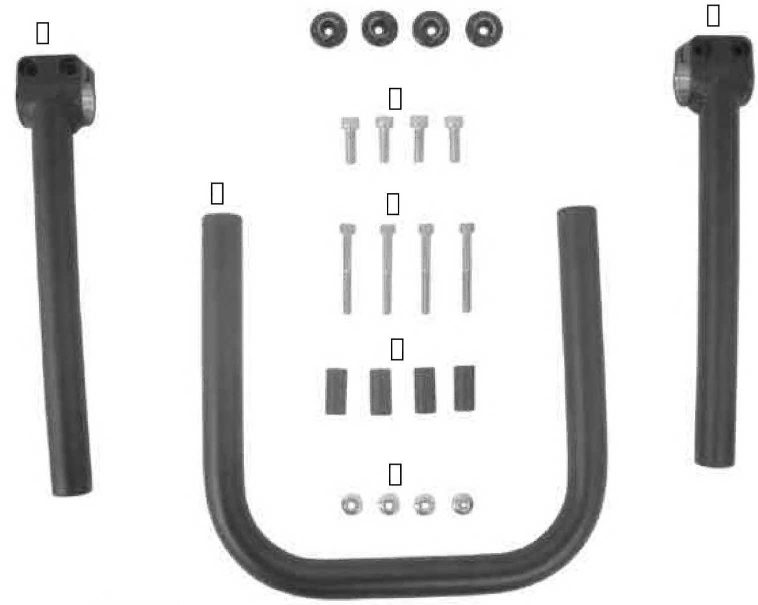

COPY

[illegible]	[illegible]	[illegible]	[illegible]	[illegible]
[illegible]	[illegible]	[illegible]	[illegible]—[illegible]—[illegible]	[illegible]
			[illegible]—[illegible]—[illegible]	[illegible]
[illegible]	[illegible]	[illegible]	[illegible]—[illegible]—[illegible]	[illegible]
			[illegible]—[illegible]—[illegible]	[illegible]
[illegible]	[illegible]	[illegible]	[illegible]—[illegible]—[illegible]	[illegible]
			[illegible]—[illegible]—[illegible]	[illegible]
			[illegible]—[illegible]—[illegible]	[illegible]
			[illegible]—[illegible]—[illegible]	[illegible]
[illegible]	[illegible]	[illegible]	[illegible]—[illegible]—[illegible]	[illegible]
			[illegible]—[illegible]—[illegible]	[illegible]
			[illegible]—[illegible]—[illegible]	[illegible]
			[illegible]—[illegible]—[illegible]	[illegible]
[illegible]	[illegible]	[illegible]	[illegible]—[illegible]—[illegible]	[illegible]
[illegible]	[illegible]	[illegible]	[illegible]—[illegible]—[illegible]	[illegible]
[illegible]	[illegible]	[illegible]	[illegible]—[illegible]—[illegible]	[illegible]
[illegible]	[illegible]	[illegible]	[illegible]—[illegible]—[illegible]	[illegible]

※[illegible]

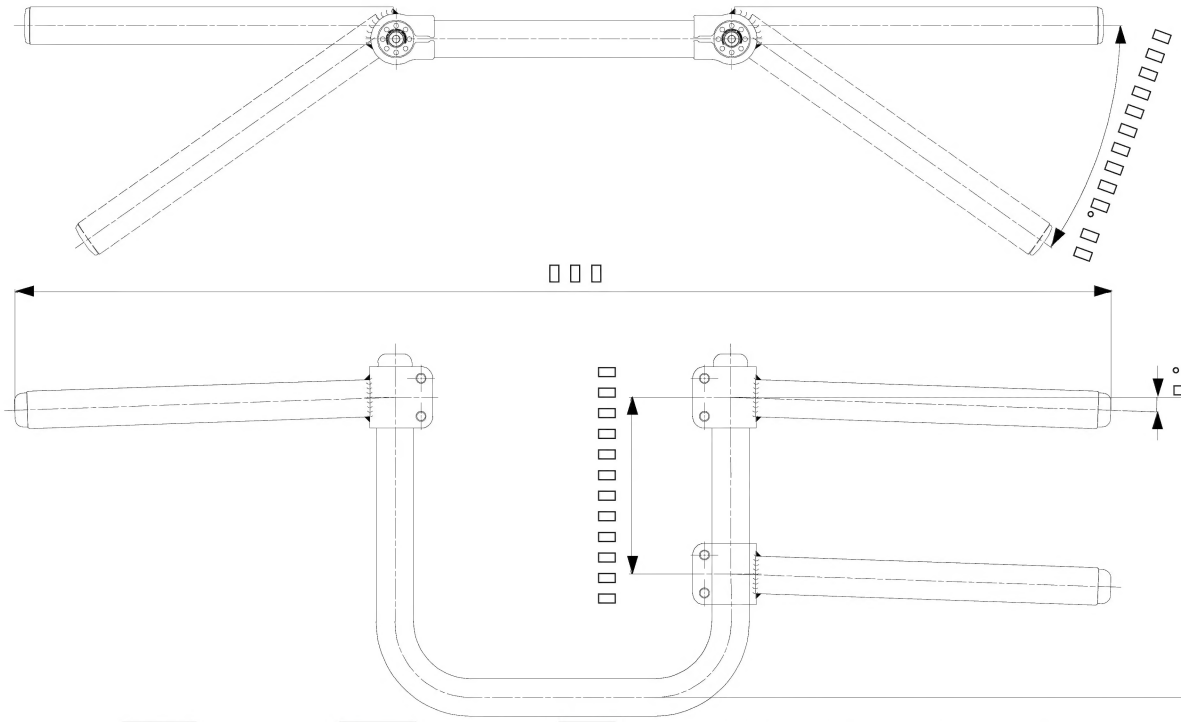

※

※

○

※

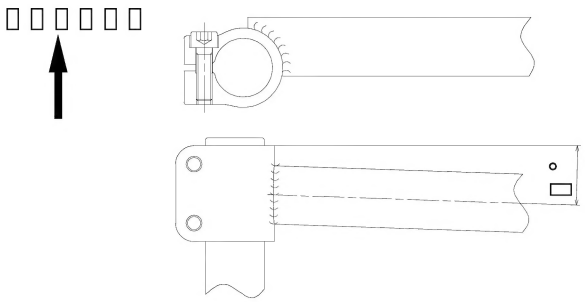

○

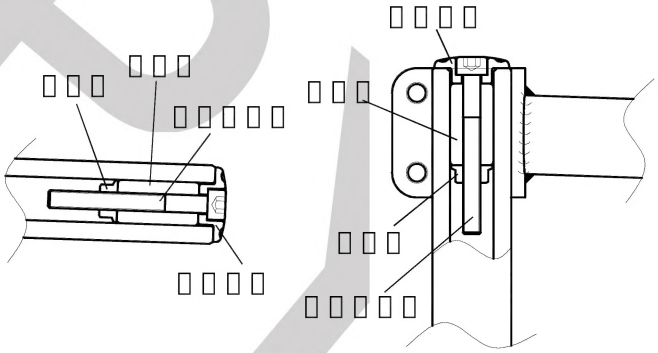

株式会社 SPECIAL PARTS 武川

http://www.takegawa.co.jp